GV-EBD8813 AI 8MP H.265 4.3x Zoom Super Low Lux WDR Pro IR Eyeball IP Dome



- AI Deep learning: AI Perimeter Protection & Classification (Human, Vehicle)
- 1/2.8" progressive scan CMOS
- Triple streams from H.265, H.264 or MJPEG
- Min. illumination at 0.003 lux
- Up to 20 fps at 3840 x 2160
- Intelligent IR
- Day and night function (with removable IR-cut filter)
- Motorized varifocal lens for remote focus / zoom adjustment
- 3-axis mechanism (pan / tilt / rotate)
- IR distance up to 40 m (130 ft)
- Ingress protection (IP67)
- Vandal resistance (IK10 for metal casing)
- DC 12V / PoE (IEEE 802.3af)
- Built-in micro SD card slot (SD / SDHC / SDXC / UHS-I) for local storage
- Built-in microphone
- Wide Dynamic Range Pro (WDR Pro)
- AI analytics (Intrusion, Crossing Line, Entering Area, Leaving Area, Face Detection, People Flow Counting, Crowd Density Monitoring)
- 3D noise reduction
- Motion detection
- Tampering Alarm
- Text overlay
- Privacy mask
- 12 languages supported
- ONVIF (Profile G, S, T, M) conformant

Introduction

The Eyeball Dome IP Camera is an outdoor, network camera equipped with an automatic IR-cut filter and IR LEDs for day and night surveillance. The camera supports H.265 video codec to achieve a better compression ratio while maintaining high-quality pictures at reduced network bandwidths. GV-EBD8813 adheres to IK10 and IP67 standards, and can be powered through PoE.

Empowered by deep learning algorithms, its AI technology distinguishes humans and vehicles from other moving objects. Integrated with GeoVision Video Management Software (VMS), it supports AI perimeter protection, real-time alerts, event playback, and more.

Deep Learning Function

Face Detection



AI Perimeter Protection
(Intrusion, Crossing Line
Entering Area, Leaving Area)

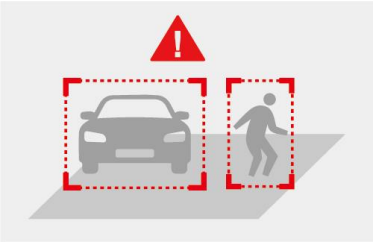

People Flow Counting

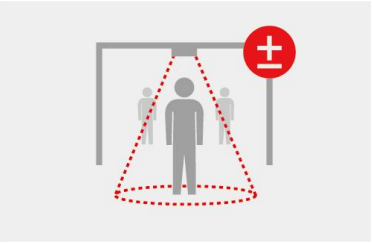

Dimensions

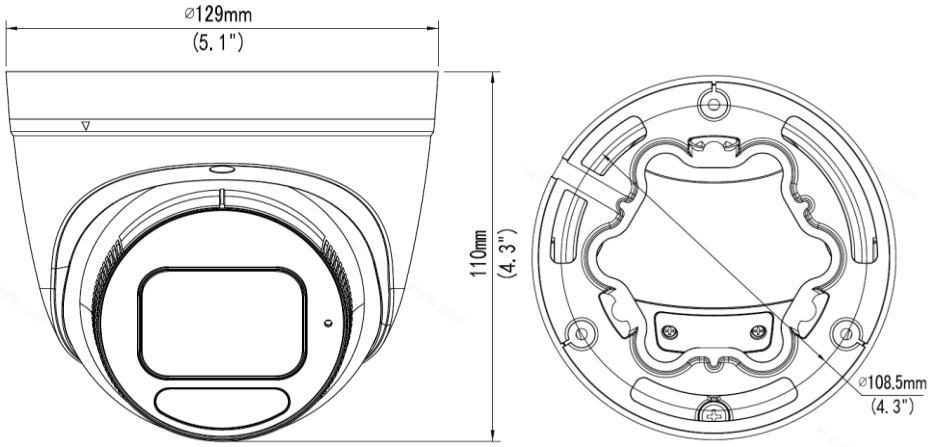

Specifications

Camera					
Image Sensor		1/2.8" progressive scan super low lux CMOS			
Picture Elements		3840 (H) x 2160 (V)			
Minimum Illumination	Color	0.003 Lux (F1.5, AGC ON)			
	IR ON	0 Lux			
Shutter Speed		Auto / Manual (1 ~ 1/100000 sec)			
White Balance		Auto / Manual			
Gain Control		Auto / Manual			
S/N Ratio		56 dB			
WDR		WDR Pro			
Dynamic Range		120 dB			
Lens					
Megapixel		8 MP			
Day / Night		Yes (with removable IR-cut filter)			
Lens Type		Motorized varifocal lens			
Focal Length		2.8 ~ 12 mm			
Maximum Aperture		F/1.6			
Mount		Ø 12 mm			
FOV	Horizontal	107° ~ 29°			
	Vertical	54.2°~16.3°			
	Diagonal	111.0°~33.1°			
Operation	Focus	Auto / Manual			
	Zoom	4.3x Optical Zoom			
	Iris	Fixed			
IR LED Quantity		2 IR LEDs			
Max. IR Distance		40 m (130 ft)			
DORI		**Detect**	**Observe**	**Recognize**	**Identify**
Lens	2.8 mm	86.9 m (285.1 ft)	34.8 m (114.2 ft)	17.4 m (57.1 ft)	8.7 m (28.5 ft)
	12 mm	372.4 m (1221.8 ft)	149 m (488.8 ft)	74.5 m (244.4 ft)	37.2 m (122.0 ft)
Operation					
Video Compression		H.265, H.264, MJPEG			
Video Streaming		Triple streams			
Video Resolution	Main Stream	3840 x 2160 (Default), 2944 x 1656, 2592 x 1944, 2560 x 1440, 1920 x 1080			
	Sub Stream	1920 x 1080, 1280 x 720, 720 x 576, 704 x 288, 640 x 360 (Default), 352 x 288			
	Third Stream (Closed by Default)	720 x 576, 704 x 288, 640 x 360, 352 x 288			
Frame Rate		20 fps at 3840 x 2160, 25 fps at 3072 x 1728 / 2560 x 1440, 30 fps at 1920 x 1080 (60 / 50 Hz) *The frame rate and performance may vary depending on the number of connections and data bitrates (different scenes).			

Maximum Throughput		40 Mbps
Maximum Streams *When the total bitrate is within the maximum throughput		20
Video Analytics		Motion Detection, Tampering Alarm, Audio Detection *Tampering alarm and audio detection are only accessible through the camera's Web interface, which can be used to trigger alerts such as e-mail and FTP.
Image Setting		Brightness, Contrast, Saturation, Sharpness, Flicker-less, Image Orientation (Flip, Mirror, 0°, 90°, 180°, 270°-including Corridor format)
Audio Compression		G.711
Audio Support		One-way Audio
Deep Learning Function		
AI Analytics		- Perimeter Protection (Human & Vehicle classification): Cross Line, Enter Area, Leave Area, Intrusion - Face Detection, People Flow Counting, Crowd Density Monitoring *All Perimeter Protection rules can be enabled together. However, due to hardware resource limitations, only one AI function can be enabled at a time: Perimeter Protection, Face Detection, People Flow Counting, or Crowd Density Monitoring.
Network		
Interface		10/100 Ethernet
Protocol		802.1X authentication (EAP-TLS, EAP-MD5), ARP, DHCP, DDNS, DNS, DynDNS, FTP, HTTP, HTTPS, ICMP, IGMP, IPv4, IPv6, NTP, PPPoE, RTCP, RTP, RTSP, SMTP, SNMP, TCP, UDP, UPnP, ONVIF (Profile G, S, T, M)
Mechanical		
Camera Angle Adjustment	Pan	0° ~ 360°
	Tilt	0° ~ 75°
	Rotate	0° ~ 360°
Connectors	Power	DC Jack (DC 12V, 1.25A), PoE
	Ethernet	RJ-45
	Audio	1 In (built-in microphone)
	Local Storage	microSD card slot (SD / SDHC / SDXC), up to 512 GB
General		
Environment Temperature	Start-up	-30°C ~ 60°C (-22°F ~ 140°F)
	Operation	
Humidity		0% ~ 95% (no condensation)
Power Source		12V DC / PoE (IEEE802.3af)
Max. Power Consumption		8.16W
Dimensions		Ø 129 x 110 mm (Ø5.1" x 4.3")
Weight		0.67 kg (1.48 lb)
Ingress Protection		IP67
Vandal Resistance		IK10 for metal casing
Certification		CE, FCC, RoHS, UL compliant
Web Interface		
Installation Management		Web-based configuration
Maintenance		Firmware upgrade through Web Browser or GV-IP Device Utility
Access from Web Browser		Live View, Video Recording, Change Video Quality, Bandwidth Control, Image Snapshot, Defog, Digital Zoom, Text Overlay, Image Masking
Language		Chinese Traditional, Czech, English, French, German, Hungarian, Italian, Japanese, Polish, Portuguese, Russian, Spanish
Web Interface		
Software Supported		GV-VMS (V17.4.1 / V18.2.1), GV-DVR / NVR (V8.9.1), GV-Control Center (V3.8.0), GV-Recording Server / Video Gateway (V2.0.0), GV-Edge Recording Manager Win version (V2.0.0), GV-Redundant / Failover Server (V1.2.0)
Smart Device Access		GV-Eye for iOS and Android
Live Viewing		Browser (IE, Edge, Chrome, Firefox), Mobile App

Note:

1. It is required to apply patch files to all or some of the supported software.
2. Do not use clothes or any ordinary material to clean the camera cover since they may result in scratches.
3. Specifications are subject to change without notice.

Packing List

1. GV-EBD8813 IR Eyeball Dome
2. Waterproof Rubber Set
3. Screw kit
4. Drill Template Paster
5. Download Guide

Accessories

Model No.	Name		Details
GV-Mount107 (must be used with GV-Mount212P or GV-Mount212-1)	Pendant Bracket		Dimensions: Ø 120 x 334 mm (Ø 4.72” x 13.15”) Weight: 0.74 kg (1.63 lb)
GV-Mount211P	Wall Mount and Junction Box		Dimensions: Ø 233 x 125 x 125 mm (Ø 9.2” x 4.9” x 4.9”) Weight: 1 kg (2.2 lb)
GV-Mount211-1	Wall Mount and Junction Box		Dimensions: 235 x 126.2 x 128.5 mm (9.3” x 5.0” x 5.1”) Weight: 0.84 kg (1.85 lb)
GV-Mount212P	Junction Box		Dimensions: Ø 126 x 36 mm (Ø 5.0” x 1.4”) Weight: 0.22 kg (0.48 lb)
GV-Mount212-1	Junction Box		Dimensions: Ø 126 x 38.5 mm (Ø 5.0” x 1.5”) Weight: 0.24 kg (0.53 lb)
GV-Mount300-2	Convex Corner Mount		Dimensions: 137 x 233 x 160 mm (5.4” x 9.17” x 6.3”) Weight: 1.65 kg (3.64 lb)
GV-Mount310-2	Concave Corner Mount		Dimensions: 111.2 x 369.9 x 210 mm (2.6” x 11.4” x 6.6”) Weight: 1.65 kg (3.64 lb)
GV-Mount420 (must be used with GV-Mount211P)	Pole Mount Bracket		Dimensions: Ø 120 x 120 x 53.4 mm (Ø 4.7” x 4.7” x 2.1”) Weight: 0.45 kg (0.99 lb) Steel Strap Diameter: Ø 67 ~ 127 mm (Ø 2.6” ~ 5”)
GV-Mount440-1 (must be used with GV-Mount211P or GV-Mount211-1)	Pole Mount Bracket		Dimensions: 136 x 127 x 63.6 mm (5.4” x 5.0” x 2.5”) Weight: 0.34 kg (0.75 lb) Steel Strap Diameter: Ø 67 ~ 127 mm (Ø 2.6” ~ 5”)

GV-Mount704 (must be used with GV-Mount107)	Extension Tube		Dimensions: Ø 3.5 x 10 or 20 or 30 or 50 cm (Ø 1.38 x 3.9 or 7.9 or 11.8 or 19.7") Weight: 225 g or 360 g or 500 g or 780 g (0.5 lb or 0.79 lb or 1.1 lb or 1.72 lb)
GV-PA191	PoE Adapter		GV-PA191 is a Power over Ethernet (PoE) adapter designed to provide power to the IP device through a single Ethernet cable.
GV-PA301	Gigabit PoE Adapter		GV-PA301 is a Gigabit Power over Ethernet (PoE) adapter.
GV-POE Switch		The GV-POE Switch is designed to provide power along with network connection for IP devices. The GV-POE Switch is available in various models with different numbers and types of ports.	
Power Adapter		Contact our sales representatives for the countries and areas supported.	

Mounting Type

Wall Mount with Junction Box	Pole Mount
GV-Mount211-1	**GV-Mount211-1 + GV-Mount440-1**
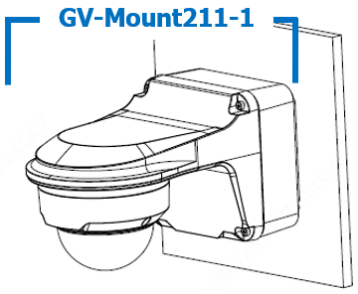	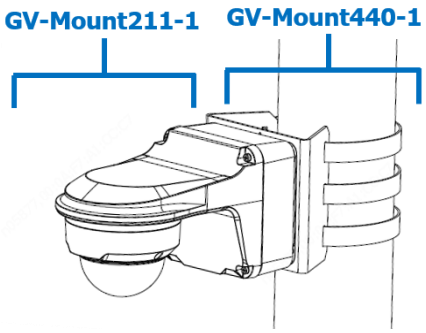

Convex Corner Mount	Concave Corner Mount
GV-Mount300-2	**GV-Mount310-2**
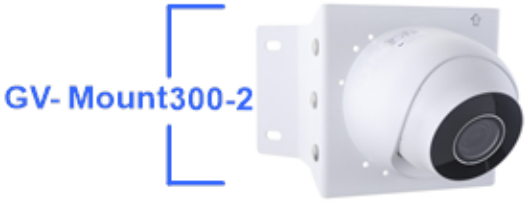	

Convex / Concave Corner Mount	Convex / Concave Corner Mount
GV-Mount211P / 211-1 + GV-Mount300-2 / 310-2	**GV-Mount212P / 212-1 + GV-Mount300-2 / 310-2**
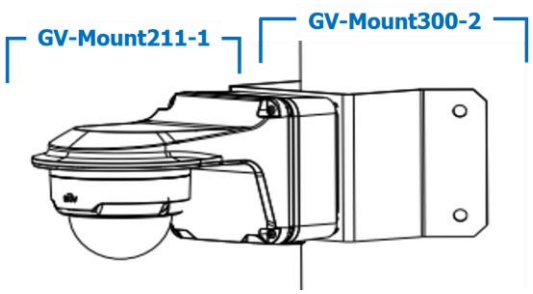	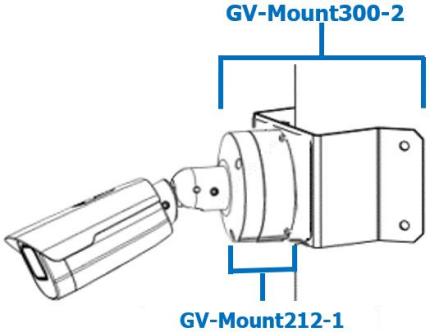

Junction Box Mount	Pendant Mount	Pendant Mount with Extension Tube
GV-Mount212-1	GV-Mount212-1 + GV-Mount107	GV-Mount212-1 + GV-Mount704 + GV-Mount107
