GV-PFER12800 AI 12MP H.265 Super Low Lux WDR Pro IR Fisheye Rugged IP Camera



Introduction

GV-PFER12800 is a 12 MP outdoor fisheye camera allowing you to monitor all angles of a location and can be installed to the ceiling or the wall. The camera supports H.265 video codec to achieve better compression ratio while maintaining high quality image at reduced network bandwidths. The camera adheres to IP67 and IK10 standards and can be powered through PoE. Furthermore, the camera has the capability to conduct on-edge fisheye dewarping, eliminating the need to utilize recourses from the backend devices.

Empowered by deep learning algorithms, AI technology distinguishes humans from other moving objects. Integrated with GeoVision Video Management Software (VMS), it supports AI perimeter protection, real time alert, events playback and more.

Key Features

- AI deep learning: Smart Perimeter Protection (Humans)
- 1/1.7" progressive scan CMOS sensor
- Min. illumination at 0.05 lux
- Dual streams from H.265, H.264
- Up to 30 fps at 3000 x 3000
- 6 on-edge dewarping modes
- Day and Night function (with removable IR-cut filter)
- Intelligent IR
- IR distance up to 15 m (50 ft)
- Vandal resistance (IK10 for metal casing)
- Ingress protection (IP67)
- Built-in microSD card slot (SD/SDHC/SDXC/UHS-I, Class 10) for local storage
- Two-way audio capable
- Built-in microphone
- DC 12V/ PoE (IEEE 802.af)
- Provides 360° and 180° panorama view
- Wide Dynamic Range Pro (WDR Pro)
- AI analytics (Region Entrance, Region Exiting, Advanced Motion Detection, Line Crossing, Loitering, People Counting)

- 3D noise reduction
- Motion detection
- Virtual PTZ function
- Auto Pan function
- Privacy mask
- Text overlay
- 20 languages on Web interface
- ONVIF (Profile G, Q, S, T) conformant
- SIP/VoIP Support

Deep Learning Function

AI Perimeter Protection
(Crossing Line, Enter Area, Leaving Area)

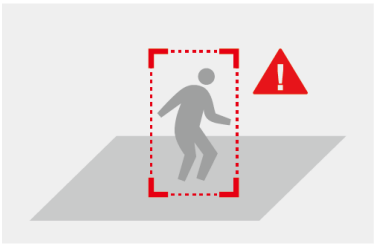

People Counting

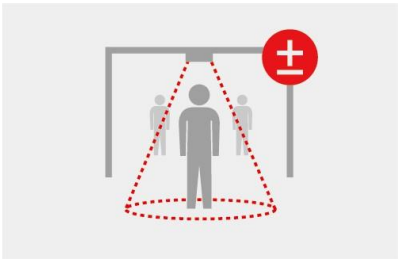

Dimensions

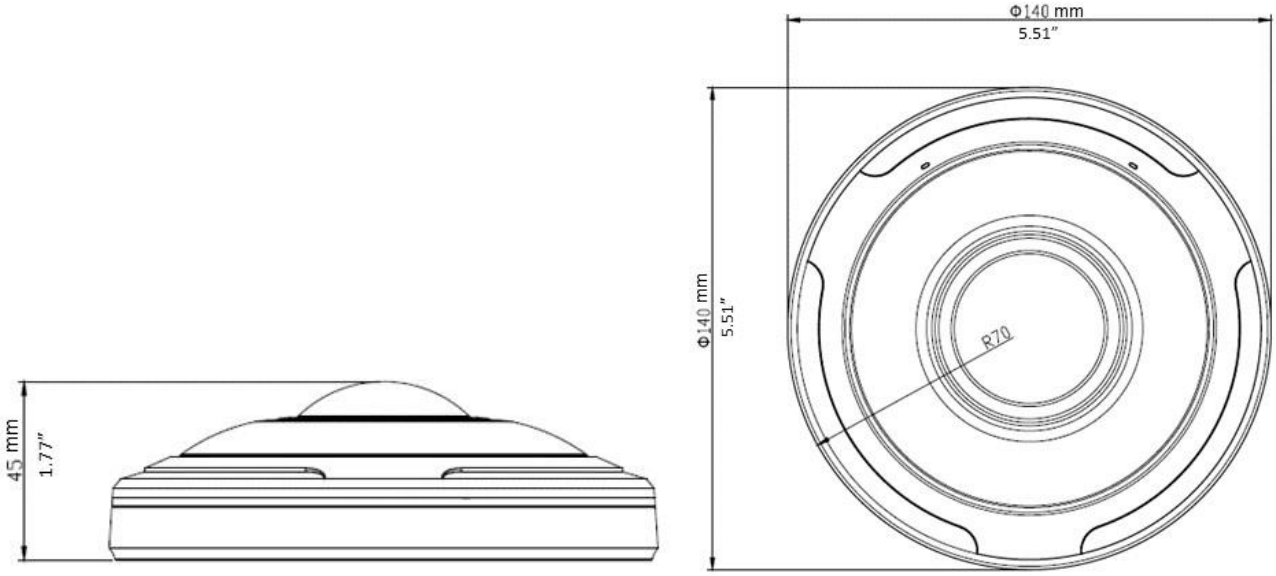

Specifications

Camera					
Image Sensor		1/1.7” progressive scan CMOS			
Picture Elements		4000 (H) x 3000 (V)			
Minimum Illumination	Color	0.05 Lux (F2.8, AGC ON)			
	IR On	0 Lux			
Shutter Speed		Auto / Manual (1 ~ 1/100000s)			
White Balance		Auto / Manual			
S/N Ratio		55 dB			
WDR Pro		Yes			
Dynamic Range		120 dB			
Optics Lens					
Megapixel		Yes			
Day/Night		Yes (with removable IR-cut filter)			
Lens Type		Fixed			
Focal Length		1.98 mm			
Maximum Aperture		F/2.8			
Mount		M12			
Image Format		1/1.7”			
Horizontal FOV		180°			
Operation	Focus	Fixed			
	Zoom	Fixed			
	Iris	Fixed			
IR LED Quantity		6 IR LEDs			
Max. IR Distance		15 m (50 ft)			
DORI		**Detect**	**Observe**	**Recognize**	**Identify**
Lens	1.98 mm	38.4 m (125.9 ft)	15.2 m (49.8 ft)	7.3 m (23.9 ft)	3 m (9.8 ft)
Operation					
Video Compression		H.265, H.264			
Video Streaming		Dual streams from H.265 & H.264			
Frame Rate		30 fps at 3000 x 3000, 2560 x 2560, 1920 x 1920, 1280 x 1280, 1280 x 960, 1024 x 1024, 736 x 736, 576 x 576 (60 Hz) 25 fps at 3000 x 3000, 2560 x 2560, 1920 x 1920, 1280 x 1280, 1280 x 960, 1024 x 1024, 736 x 736, 576 x 576 (50 Hz) *The frame rate and the performance may vary depending on the number of connections and data bitrates (different scenes).			
Maximum Throughput		100 Mbps			
Maximum Stream *When the total bitrate is within the maximum throughput		10			
Video Analytics		Motion Detection, Tamper Detection, Network Disconnection, Audio Alarm, External Input, Object Left, Object Removed, Heat Map *Tamper detection and audio alarm are only accessible through the camera’s Web interface, which can be used to trigger alerts such as e-mail and FTP			
Heat Map		On / Off			
Image Settings		Brightness, Contrast, Saturation, Sharpness, Flicker-less, 3D Noise Reduction, WDR, White Balance, Display Mode.			
Hardware (On-Edge) Dewarping	Ceiling Mount	Fisheye View, 180° Panoramic View, 180° Panoramic View x 2, PTZ x 4, Fisheye View + PTZ x 3, 180° Panoramic View + PTZ x 3			
	Wall Mount	Fisheye View, 180° Panoramic View, PTZ x 4, Fisheye View + PTZ x 3, 180° Panoramic View + PTZ x 3			
	Flat Mount	Fisheye View, 180° Panoramic View, 180° Panoramic View x 2, PTZ x 4, Fisheye View + PTZ x 3, 180° Panoramic View + PTZ x 3			
Audio Compression		G.711			
Audio Support		Two-way audio (External speaker required)			

Digital I/O	Input		1 input, dry contact, NO / NC
	Output		1 relay output (1A 30V DC / 0.3A 125V AC)
Video Resolution			
Software Dewarping	Main Stream		3000 x 3000 (Default), 2560 x 2560, 1920 x 1920, 1280 x 1280
	Sub Stream		1280 x 960, 1024 x 1024, 736 x 736 (Default), 576 x 576
Hardware (On-Edge) Dewarping	Main Stream	Fisheye	3000 x 3000, 2560 x 2560, 1920 x 1920, 1280 x 1280
		180° Panoramic View	2944 x 736, 2560 x 640, 1920 x 480
		180° Panoramic View x 2	3008 x 1504, 2688 x 1344, 1920 x 960, 1280 x 640
		PTZ x 4	3840 x 2176, 3072 x 1728
		Fisheye View + PTZ x 3	3840 x 2176, 3072 x 1728
		180° Panoramic View + PTZ x 3	3840 x 2176, 3072 x 1728
	Sub Stream	Fisheye	1280 x 960, 1024 x 1024, 736 x 736, 576 x 576
		180° Panoramic View	1920 x 480, 1280 x 320, 1024 x 256
		180° Panoramic View x 2	1280 x 640, 704 x 352, 640 x 320
		PTZ x 4	1920 x 1088, 1280 x 720
		Fisheye View+ PTZ x 3	1920 x 1088, 1280 x 720
		180° Panoramic View + PTZ x 3	1920 x 1088, 1280 x 720
Network			
Interface			10/100/1000 Ethernet
Protocol			IPv4/IPv6, ARP, TCP, UDP, RTCP, RTP, RTSP, RTMP, HTTP, HTTPS, DNS, DDNS, DHCP, FTP, NTP, SMTP, SNMP, UPnP, Bonjour, SIP, PPPoE, VLAN, 802.1X authentication (EAP-MD5), QoS, IGMP, ICMP, SSL, ONVIF (Profile G, Q, S, T)
Deep Learning Function			
AI Analytics			Region Entrance, Region Exiting, Advanced Motion Detection, Line Crossing, Loitering, People Counting *Vehicle recognition is currently not applicable.
Mechanical			
Connectors	Power		DC Jack
	Ethernet		RJ-45
	Audio		1 in (Built-in or external microphone) 1 out (4-pin terminal block pitch 3.5 mm (0.14”)) *The Audio In port only supports microphones with power supply.
	Digital I/O		4-pin terminal block pitch 3.5 mm (0.14”)
	Local Storage		microSD card slot (SD/SDHC/SDXC/UHS-I, Class 10) *UHS-II card type is not supported.
General			
Operating Temperature			-40°C ~ 60°C (-40°F ~ 140°F)
Humidity			0% ~ 90% (no condensation)
Power Source			12V DC / PoE (IEEE 802.3af)
Max. Power Consumption			11 W
Dimension			Ø 140 x 45.4 mm (Ø 5.5” x 1.8”)
Weight			700 g (1.54 lb)
Ingress Protection			IP67
Vandal Resistance			IK10
Certification			CE, FCC, RoHS compliant
Web Interface			
Installation Management			Web-based configuration
Maintenance			Firmware upgrade through Web Browser or GV-IP Device Utility

Language	Arabic, Bulgarian, Chinese Traditional, Czech, Dutch, English, Finnish, French, German, Italian, Japanese, Korean, Persian, Polish, Portuguese, Russian, Slovenian, Spanish, Thai, Turkish
Applications	
Software Supported	GV-VMS (V17.4.7 / V18.3.2, patch files required), GV-Edge Recording Manager (V2.2.7), GV-Control Center (V4.2.0), GV-Recording Server (V2.1.0)
Smart Device Access	GV-Eye for iOS and Android (V3.1.0)
Live Viewing	Browser (Edge, IE mode in Edge, Chrome, Firefox, Safari)

Note:

1. To avoid reflected glare by IR LED, keep a minimum distance of 1 m (3.28 ft) between the camera body and nearby walls.
2. All specifications are subject to change without notice.

Packing List

1. GV-PFER12800 Fisheye Camera
2. Waterproof Rubber Set
3. Screw Kit
4. Torx Wrench
5. Hex Key H2.0
6. Download Guide

Accessories

Model No.	Name		Details
GV-Mount109	Pendant Mount		Dimensions: Ø 144 x 290 mm (Ø 5.66" x 11.41") Weight: 400 g (0.88 lb)
GV-Mount110 (must be used with GV-Mount109)	Extension Tube		Dimensions: Ø 57 x 255 mm (Ø 2.24" x 10.03") Weight: 325 g (0.71 lb)
GV-Mount211-7	Wall Mount Bracket		Dimensions: 238 x 159 x 136 mm (9.37" x 6.26" x 5.35") Weight: 560 g (1.23 lb)
GV-Mount508	Junction Box		Dimensions: 145 x 167 x 33.5 mm (5.71" x 6.57" x 1.32") Weight: 200 g (0.44 lb)
GV-Mount430 (must be used with GV-Mount211-7)	Pole Mount Bracket		Dimensions: 170 x 51.5 x 152.6 mm (6.69" x 2.03" x 6.01") Weight: 720 g (1.59 lb)

GV-PA191	Power over Ethernet (PoE) Adapter		GV-PA191 is a Power over Ethernet (PoE) adapter designed to provide power to the IP device through a single Ethernet cable.
GV-PA301	Gigabit PoE Adapter		GV-PA301 is a Gigabit Power over Ethernet (PoE) adapter.
GV-POE Switch		GV-POE Switch is designed to provide power along with network connection for IP devices. The GV-POE Switch is available in various models with different numbers and types of ports.	
Power Adapter		Contact our sales representatives for the countries and areas supported.	